热保护器

Thermal Protector (TMS)

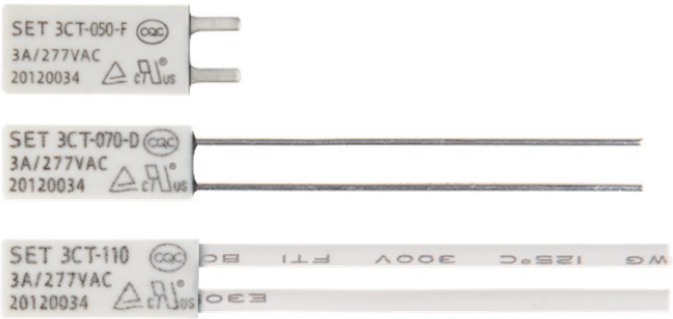

TMS

TMS

特征 Features

- 快速响应 — Fast Response
- 性能稳定 — Stable Performance
- 额定电流：(2 ~ 20) A — Rated Current: (2 ~ 20) A
- 额定电压：12, 24 VDC, 125, 277 VAC — Rated Voltage: 12, 24 VDC, 125, 277 VAC
- 额定动作温度：(30 ~ 175) ºC — Rated Operating temperature: (30 ~ 175) ºC
- 低接触电阻 — Low Contact Resistance
- 良好焊接性能 — Excellent Welding Performance
- 自动复位 — Automatic Reset
- 符合RoHS & REACH — RoHS & REACH Compliance

厦门赛尔特电子有限公司版权所有
All Rights Reserved by Xiamen SET Electronics Co., Ltd. 2021-2023 V5.0

热保护器
Thermal Protector (TMS)

热保护器特性与型号概览
Thermal Protector (TMS) Features & Model List Overview

页码 Page	8
系列 Series	17AM
额定动作温度 Rated Operating Temperature T_o (°C) / 型号 Model	
175	17AM042
170	17AM041
165	17AM040
160	17AM039
155	17AM038
150	17AM037
145	17AM036
140	17AM035
135	17AM034
130	17AM033
125	17AM032
120	17AM031
115	17AM030
110	17AM029
105	17AM028
100	17AM027
95	17AM026
90	17AM025
85	17AM024
80	17AM023
75	17AM022
70	17AM021
65	17AM020
60	17AM019
55	17AM018
50	17AM017

$I_{r(A)}$ 额定电流 Rated Current	8	15	15
$U_{r(VAC),(VDC)}$ 额定电压 Rated Voltage	277 AC	120 AC	24 DC
寿命次数 Life Cycles	10,000		
接触电阻 Contact Resistance	≤ 50 mΩ		
电气强度 Electric Strength	900 V.r.m.s 60 Hz, 1 minute，端子与端子之间（当触点被分离） 900 V.r.m.s 60 Hz, 1 minute, between the two terminals (when the contact is disconnected) 1700 V.r.m.s 60 Hz, 1 minute，端子到外壳 1700 V.r.m.s 60 Hz, 1 minute, terminal to can		
长期工作温度 Long-term Service Temperature	-20 °C to 180 °C		
产品结构 Product Structure	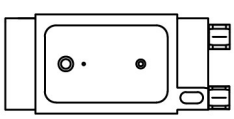 A type	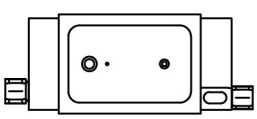 B type	

TMS

TMS

厦门赛尔特电子有限公司版权所有
All Rights Reserved by Xiamen SET Electronics Co., Ltd. 2021-2023 V5.0

热保护器
Thermal Protector (TMS)

热保护器特性与型号概览
Thermal Protector (TMS) Features & Model List Overview

页码 Page	14
系列 Series	12TP
型号 Model / 额定动作温度 Rated Operating Temperature T_o (°C)	
155	12TP-155
150	12TP-150
145	12TP-145
140	12TP-140
135	12TP-135
130	12TP-130
125	12TP-125
120	12TP-120
115	12TP-115
110	12TP-110
105	12TP-105
100	12TP-100
95	12TP-095
90	12TP-090
85	12TP-085
80	12TP-080
75	12TP-075
70	12TP-070
65	12TP-065
60	12TP-060
55	12TP-055
50	12TP-050
45	12TP-045
40	12TP-040
35	12TP-035
30	12TP-030

$I_{r(A)}$ 额定电流 Rated Current	12	20	8
$U_{r(VAC),(VDC)}$ 额定电压 Rated Voltage	277 AC	125 AC	24 DC
寿命次数 Life Cycles	10,000		100,000
接触电阻 Contact Resistance	≤ 30 mΩ		
电气强度 Electric Strength	900 V.r.m.s 60 Hz, 1 minute，端子与端子之间（当触点被分离） 900 V.r.m.s 60 Hz, 1 minute, between the two terminals (when the contact is disconnected) 1700 V.r.m.s 60 Hz, 1 minute，端子到外壳 1700 V.r.m.s 60 Hz, 1 minute, terminal to case		
长期工作温度 Long-term Service Temperature	-20 °C to 160 °C		
产品结构 Product Structure	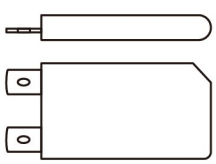	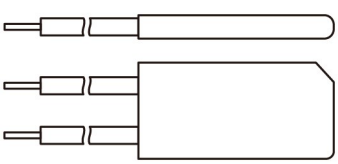	

TMS

TMS

厦门赛尔特电子有限公司版权所有
All Rights Reserved by Xiamen SET Electronics Co., Ltd. 2021-2023 V5.0

热保护器
Thermal Protector (TMS)

热保护器特性与型号概览
Thermal Protector (TMS) Features & Model List Overview

页码 Page	21
系列 Series	3CT
型号 Model / 额定动作温度 Rated Operating Temperature T_o (°C)	
155	3CT-155
150	3CT-150
145	3CT-145
140	3CT-140
135	3CT-135
130	3CT-130
125	3CT-125
120	3CT-120
115	3CT-115
110	3CT-110
105	3CT-105
100	3CT-100
95	3CT-095
90	3CT-090
85	3CT-085
80	3CT-080
75	3CT-075
70	3CT-070
65	3CT-065
60	3CT-060
55	3CT-055
50	3CT-050
45	3CT-045
40	3CT-040
35	3CT-035
30	3CT-030
$I_{r(A)}$ 额定电流 Rated Current	3 / 5 / 5 / 8
$U_{r(VAC),(VDC)}$ 额定电压 Rated Voltage	277 AC / 125 AC / 24 DC / 12 DC
寿命次数 Life Cycles	10,000
接触电阻 Contact Resistance	≤ 30 mΩ
电气强度 Electric Strength	900 V.r.m.s 60 Hz, 1 minute，端子与端子之间（当触点被分离） 900 V.r.m.s 60 Hz, 1 minute, between the two terminals (when the contact is disconnected) 1700 V.r.m.s 60 Hz, 1 minute，端子到外壳 1700 V.r.m.s 60 Hz, 1 minute, terminal to case
长期工作温度 Long-term Service Temperature	-20 °C to 160 °C
产品结构 Product Structure	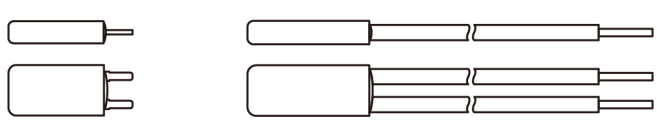

TMS

厦门赛尔特电子有限公司版权所有
All Rights Reserved by Xiamen SET Electronics Co., Ltd. 2021-2023 V5.0

热保护器

Thermal Protector (TMS)

产品描述 Description

赛尔特公司的热保护器 (TMS) 主要用双金属片来感应电流或温度。当双金属片的温度达到预校准温度时，双金属片即快速跳脱，接通或断开电路。热保护器的环境温度升高、通过双金属片的电流增加或以上两者共同的作用下，均有可能导致双金属片温度达到其预校准温度，从而接通或断开电路。涵盖额定电流 (2 ~ 20) A、额定动作温度 (30 ~ 175) ºC，符合RoHS、REACH环保要求。

SETsafe | SETfuse thermal protector (TMS) mainly uses bimetal disc to sense current or temperature. When the temperature of the bimetal disc reaches the pre-calibrated temperature, the bimetal disc quickly trips, connect or disconnect the circuit. Ambient temperature increasing or current increasing or both of the above may cause the temperature of the bimetal to reach its pre-calibrated temperature, thereby connect or disconnect the circuit. This device covers rated current from 2 to 20 A, rated operating temperature from 30 ºC to 175 ºC by various part numbers. It complies with RoHS and REACH requirements.

应用 Applications

- 电池组 Battery Packs
- 电动机 Generators
- 变压器 Transformers
- 加热器具 Heating Appliances
- 电动工具 Power Tools
- 螺线管 Solenoids
- 电机 Motors
- 充电器 Chargers
- 仪器 Instruments
- PC 板 PCB
- LED 驱动器 LED Drivers
- 热水器 Water Heaters
- 汽车电热座垫 Car Electric Heated Seats
- 烘干机 Dryers
- 罩极式电机 Shaded Pole Motors
- 分体式电容电机 Permanent Split Capacitor Motors
- 荧光灯镇流器 Fluorescent Lighting Ballasts
- HID 镇流器 HID Ballasts
- 变压器 Transformers
- 照明设备 Lighting Equipment
- 吸尘器 Vacuum Cleaners
- 汽车电机 Automotive Motors

TMS

厦门赛尔特电子有限公司版权所有
All Rights Reserved by Xiamen SET Electronics Co., Ltd. 2021-2023 V5.0

术语 Glossary

项目 Item	说明 Description
动作温度 Operating Temperature	**动作温度 Operating Temperature** 热保护器触点闭合（常开型）或断开（常闭型）时所对应的实际温度值 。 The actual temperature at which the thermal protector contacts are closed (normal open) or disconnected (normal close) .
复位温度 Recovery Temperature	**复位温度 Recovery Temperature** 热保护器触点闭合或断开后，其接点产生断开（常开型）或闭合（常闭型）时所对应的实际温度值 。 After the thermal protector contact is closed or disconnected, the contact produces the actual temperature value corresponding to the open (normal open) or closed (normal close) contact .
额定电流 Rated Current (I_r)	**额定电流 Rated Current (I_r)** 允许用于电路并安全断开的最大电流。 The current used to classify a thermal protector, which is the maximum current that Thermal Protector allows to carry and is able to cut off the circuit safely .
额定电压 Rated Voltage (U_r)	**额定电压 Rated Voltage (U_r)** 允许用于电路并安全断开的最大电压 。 The voltage used to classify a thermal protector, which is the maximum voltage that Thermal Protector allows to carry and is able to cut off the circuit safely .
循环寿命 Cycle Life	**循环寿命 Cycle Life** 双金属元件受温度影响，从原始状态跳转到断开状态（或闭合状态）的周期性变化次数。 The number of periodic changes in the temperature of a bimetal element from its original state to its open (or closed) state .
温度差 Delta Temperature	**温度差 Delta Temperature** 产品打开温度和保护器放置的环境温度之差。 Is the difference between the zero current calibrated opening temperature and ambient temperature at the protector location .

TMS

厦门赛尔特电子有限公司版权所有
All Rights Reserved by Xiamen SET Electronics Co., Ltd. 2021-2023 V5.0

注意

ATTENTION

使用 Usage

1. 这些器件不能作为服务或维修元件使用，应由原设备制造商严格使用。本产品不具有防爆等级，不应用于存在易燃蒸汽或粉尘的任何应用场合。该装置的寿命终止故障可能会导致开路或闭路状态，因此，原始设备制造商必须按照机构要求串联应用寿命终止保护。
   These devices are not intended for use as service or repair components, It should be strictly used by Original Equipment Manufacturer. This product is not rated as explosion proof and should not be applied in any application where flammable vapors or dust is present. End of life failure of this device may result in either open or closed circuit condition, and as such, OEMs must apply end of life protection in series, per agency requirements.
2. 用户全权负责本产品在最终产品或系统中的正确设计、应用和功能。用户必须从温度设置、机械和电气寿命周期、电气负载和环境条件等方面评估这些设备在其应用中的适用性。
   Users are solely responsible for proper design, application and function of this product in the end product or system. Users must evaluate the suitability of these devices in their application with respect to temperature settings, mechanical and electrical life cycles, electrical loads and environmental conditions.
3. 使用环境：大气压力范围80 kPa ~ 106 kPa，相应的海拔高度为2000米到-500米。
   When atmosphere press is from 80 kPa to 106 kPa, the related altitude shall be from 2000 meter to -500 meter.

更换 Replacement

本产品是不可修复的产品。为安全起见，应更换为等效产品，并以相同方式安装。
The product is a non-repairable product. For safety sake, it shall be replaced by an equivalent part and mounted in the same way.

存储 Storage

不要在高温、高湿度或腐蚀性气体环境下储存本产品，以免影响导线的可焊性或接触电阻。本产品应在收到货物后一年内用完。
Do not store the product at high temperature, high humility or corrosive gas environment, avoid influencing the solder-ability or contact resistance of the lead wires. The product shall be used up within 1 year after your receiving goods.

厦门赛尔特电子有限公司版权所有
All Rights Reserved by Xiamen SET Electronics Co., Ltd. 2021-2023 V5.0

安装位置 Installation Position

1. 应使本产品尽可能贴近或接近被保护部件。如电机应嵌入定子线圈上端的线圈中，如有条件，应对电机作温度场测定，以确定温度最高点。
   The product should be as close to the protected parts as possible. For example, in the motor, the product should be embedded in the upper end of the motor stator coil. If the test conditions allow, the field temperature of the motor should be measured to determine the highest temperature point.
2. 本产品在安装过程中，禁止用重力敲击，安装处不得挤压产品，以免使产品外壳变形，这将严重影响产品的保护性能。
   During the installation of the product, it is forbidden to strike heavily, and the product shall not be extruded at the installation position to avoid deformation of the product shell, which will seriously affect the protection performance of the product.

警告 Warnings

材料损坏和外壳发热的危险 Risk of Material Damage and Hot Enclosure

1. 产品的侧面板可能很热，请等产品冷却后再触摸。
   The product’s side panels may be hot, do not touch till cool down.
2. 请严格按照安装说明进行安装，包括力值的设置。未遵守这些指示可能会导致严重的人身伤害或设备损坏，触电，爆炸或弧闪的危险。
   Follow proper mounting instructions including force values. Options failure to follow these instructions can result in serious injury, or equipment damage. Hazard of electric shock, explosion or arch flash.
3. 在安装或使用此产品之前，请断开所有电源。
   Disconnect all power before installing or using this product.
4. 在打开电源之前，确认所有连接及必要防护。未遵守这些指示将可能会导致死亡或重伤。
   Make sure all the connections and protection measurements before turning on power. Failure to follow these instructions will result in death or serious injury.

TMS

厦门赛尔特电子有限公司版权所有
All Rights Reserved by Xiamen SET Electronics Co., Ltd. 2021-2023 V5.0

热保护器
Thermal Protector (TMS)

17AM 系列 Series

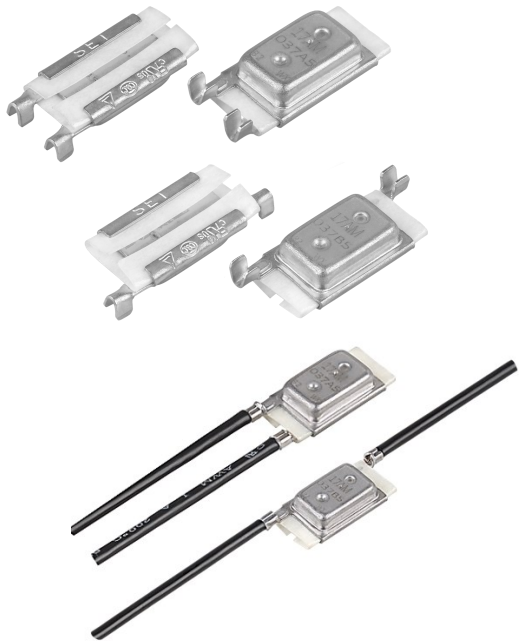

产品描述 Description

赛尔特 17AM 系列为小型化、高性能成本比的电动机热保护器。主要用双金属片来感应电流、温度。当双金属片的温度达到预校准温度时，双金属片立即快速跳脱，断开电路。当外界设备的温度回复到额定工作温度后，17AM 将自动复位，恢复电路供电。

SETsafe | SETfuse 17AM is a miniature device with high performance cost ratio for thermal motor protector. The bimetal disc senses both heat and current from the equipment which 17AM is installed on. When the temperature of the bimetal disc reaches the pre-calibration temperature, the bimetal disc will snap off quickly and break the circuit. When the equipment returns to a normal operating temperature, 17AM will automatically resets allowing power to be restored to the circuit.

应用领域 Applications

- 罩极式电机 Shaded Pole Motors
- 分体式电容电机 Permanent Split Capacitor Motors
- 荧光灯镇流器 Fluorescent Lighting Ballasts
- HID 镇流器 HID Ballasts
- 变压器 Transformers
- 照明设备 Lighting Fixtures
- 电池组 Battery Packs
- 吸尘器 Vacuum Cleaners
- 汽车用品电机 Automotive Accessory Motors
- 螺线管 Solenoids
- PCB 板 PCB

特征 Features

- 对电流和温度敏感 Current and Temperature Sensitivity
- 灵活的设计和广泛的应用 Flexible Design and Wide Application
- 符合RoHS & REACH RoHS & REACH Compliance

结构图 Structure Diagrams

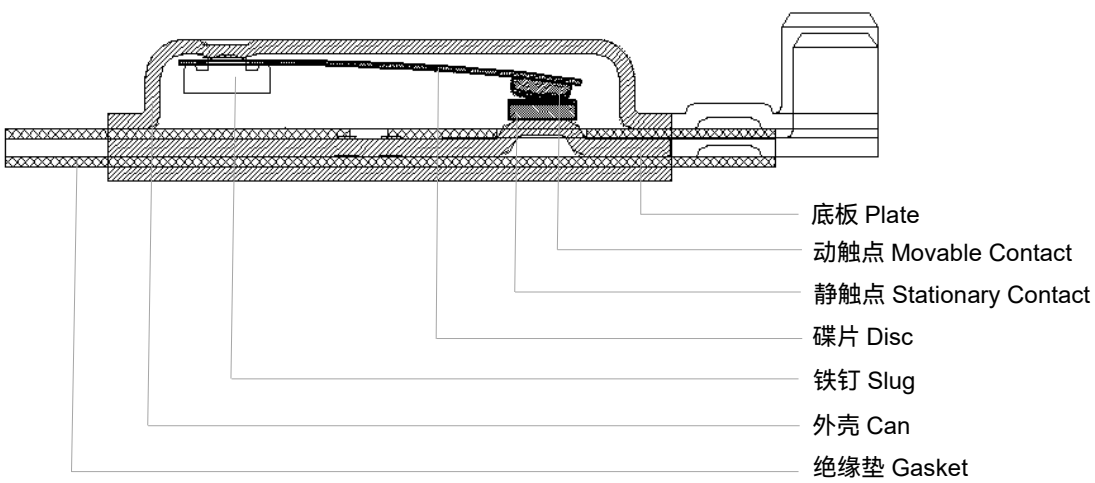

厦门赛尔特电子有限公司版权所有
All Rights Reserved by Xiamen SET Electronics Co., Ltd. 2021-2023 V5.0

安规认证 Agency Approvals

认证标志 Agency Mark	标准 Standards	认证号 File No.
	UL60730-1 UL60730-2-22	E516554
	UL60730-1 UL60730-2-9	E516553
	UL60730-1 UL60730-2-3	E524531
	CSA E60730-1 CSA E60730-2-22	E516554
	CSA E60730-1 CSA E60730-2-9	E516553
	CSA E60730-1 CSA E60730-2-3	E524531
	EN 60730-1 EN 60730-2-22	R50532384
	EN 60730-1 EN 60730-2-9	R50532346
	EN 60730-1 EN 60730-2-3	R50547608
	GB/T14536.1-2008 GB/T14536.3-2008	CQC22002332056
	GB/T14536.1-2008 GB/T14536.10-2008	CQC22002332055
	GB/T14536.1-2008 GB 14536.4-2008	CQC22002332656

TMS

厦门赛尔特电子有限公司版权所有
All Rights Reserved by Xiamen SET Electronics Co., Ltd. 2021-2023 V5.0

技术参数 Specifications

	寿命 Cycle Life	电压 Rated Voltage (U_r)	电流 Rated Current (I_r)
	循环次数 Cycles	(V)	(A)
触电容量 Contact Capacity	≥ 10,000	AC 277	8
	≥ 10,000	AC 120	15
	≥ 10,000	DC 24	15
接触电阻 Contact Resistance	≤ 50 mΩ		
动作温度范围 Operating Temperature	50 ~ 175 ºC（每 5 ºC 一档）in increments of 5*K*		
长期工作温度 Long-term Service Temperature	-20 ~ 180 ºC		
电气强度 Electric Strength	1700 V.r.m.s. 60 Hz, 1 minute,（端子与外壳间）Terminal to Case		
引线规格 Lead Wire Type	UL3135 18 AWG 600 V,（其他规格可定制）other wire size is also available		

TMS

产品型号 Part Numbering System

17AM AAA B C - DDDD

引线种类 Lead Wire Type

接引线信息的序列号 Numbers for lead wire information and configuration.

空白为不接引线 Blank means without lead wires.

温度公差 Temperature Tolerance

5: ±5 ºC

8: ±8 ºC

10: ±10 ºC

端子类型 Terminal Type

见表-1 See Table-1

A: 同侧接线端子 Terminal on same side

B: 对侧接线端子 Terminal on opposite side

温度代号 Temperature Code

见表-2 See Table-2

系列 Series

17AM

厦门赛尔特电子有限公司版权所有
All Rights Reserved by Xiamen SET Electronics Co., Ltd. 2021-2023 V5.0

表-1端子类型 Table-1 Terminal Type

类型 Type	尺寸 Dimensions (mm)	类型 Type	尺寸 Dimensions (mm)
A	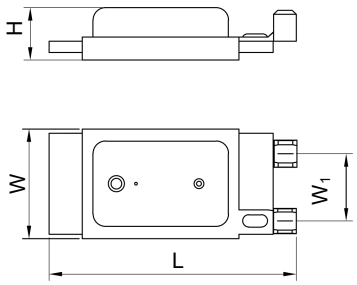	B	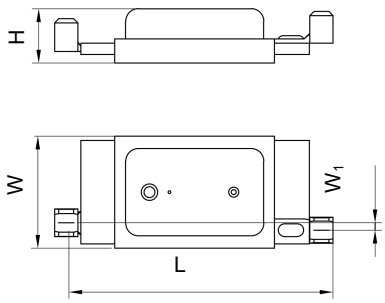

A

L (±0.5)	H (±0.5)	W (±0.5)	W_1 (±0.2)
23.4	4.7	10.6	6.5

B

L (±0.5)	H (±0.5)	W (±0.5)	W1 (±0.2)
26.3	4.7	10.6	0.7

表-2温度代码 Table-2 Temperature Code

双金属片类型 (Type of Bimetal Disc): 70 ohms / cmf

温度代号 Temperature Code	动作温度 Opening Temperature ±5 (°C)	温度代号 Temperature Code	动作温度 Opening Temperature ±5 (°C)
017	50	031	120
018	55	032	125
019	60	033	130
020	65	034	135
021	70	035	140
022	75	036	145
023	80	037	150
024	85	038	155
025	90	039	160
026	95	040	165
027	100	041	170
028	105	042	175
029	110	043[1]	180
030	115		

[1]：此款温度没有认证

[1]：There is no certification for this type of temperature

TMS

+86 592-571-5838 www.SETsafe.com www.SETfuse.com E-mail : sales@SETfuse.com
厦门赛尔特电子有限公司版权所有
All Rights Reserved by Xiamen SET Electronics Co., Ltd. 2021-2023 V5.0

临界跳闸电流和温差曲线 Ultimate Trip Current & Delta Temperature

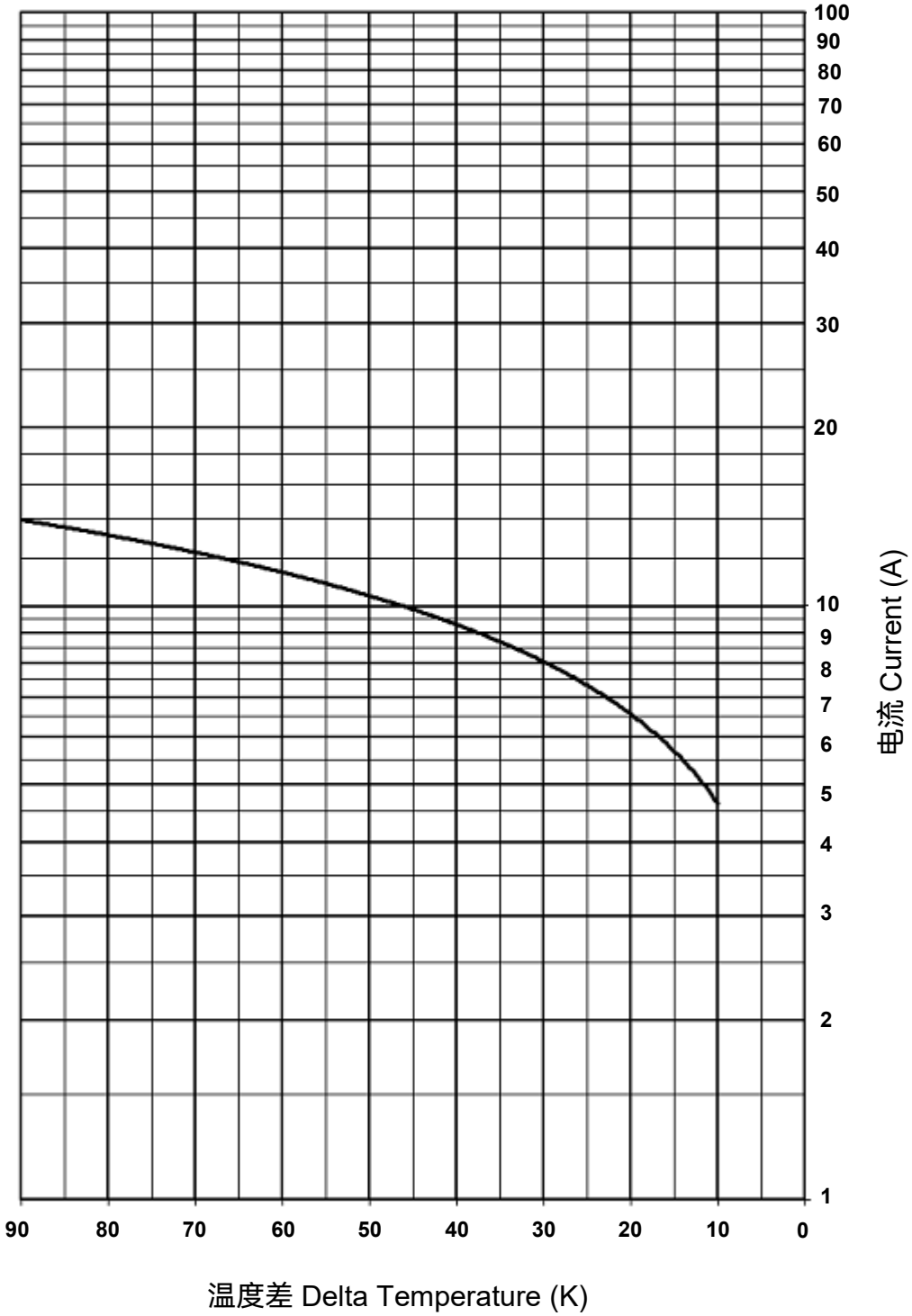

TMS

厦门赛尔特电子有限公司版权所有
All Rights Reserved by Xiamen SET Electronics Co., Ltd. 2021-2023 V5.0

包装信息 Packaging Information

散装（以表-1 A 型，线长 70 mm 为例）
Bulk (Take Table-1 Type A, wire 70 mm as an example)

项目 Item	PE袋 PE Bag	PE袋 PE Bag	纸箱 Carton
尺寸 Dimensions (mm)	150 × 85	220 × 190	370 × 315 × 195
数量 Quantity (PCS)	30	150	2400
备注：包装尺寸及数量仅供参考。 Remark: The dimensions and quantity of packaging is for reference only.			

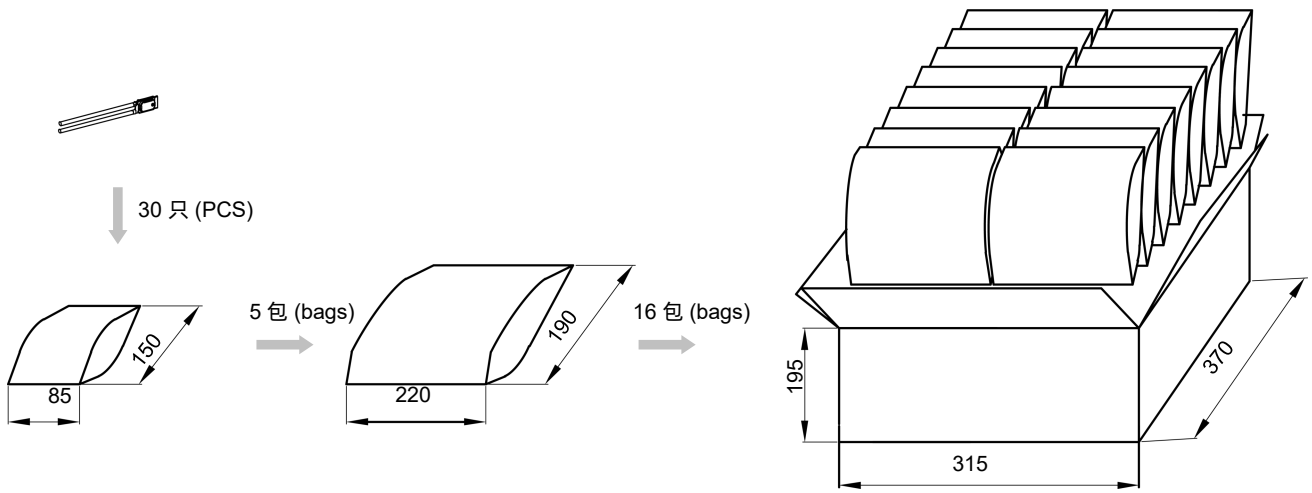

厦门赛尔特电子有限公司版权所有
All Rights Reserved by Xiamen SET Electronics Co., Ltd. 2021-2023 V5.0

产品描述 Description

赛尔特的 12TP 系列为自动复位的温控器产品，主要用圆形的双金属片来感应温度，利用弹簧臂上的触点来接通和断开回路。当环境温度超过双金属片的预校准温度时，双金属片即快速跳脱，打开弹簧臂，并快速断开电路。当环境温度下降后达到安全温度时，12TP 将自动复位，从而恢复电路供电。

SETsafe | SETfuse 12TP is an auto resettable thermal protector. It mainly uses round bimetal disc to sense the temperature, and uses the contact of the movable arm to open and close the circuit. When the ambient temperature reaches the pre-calibration temperature of the bimetal disc, the bimetal disc will snap off quickly and then make the movable arm to disconnect the circuit. While the ambient temperature recovers to the safe temperature, 12TP will automatically resets allowing power to be restored to the circuit.

应用领域 Applications

- 热水器 Water Heaters
- 汽车电热座垫 Car Electric Heated Seats
- 电池组 Battery Packs
- 变压器 Transformers
- 烘干机 Dryers

特征 Features

- 低接触电阻 Low Contact Resistance
- 双片快速动作 Snap Action Disc
- 符合RoHS & REACH RoHS & REACH Compliance

结构图 Structure Diagrams

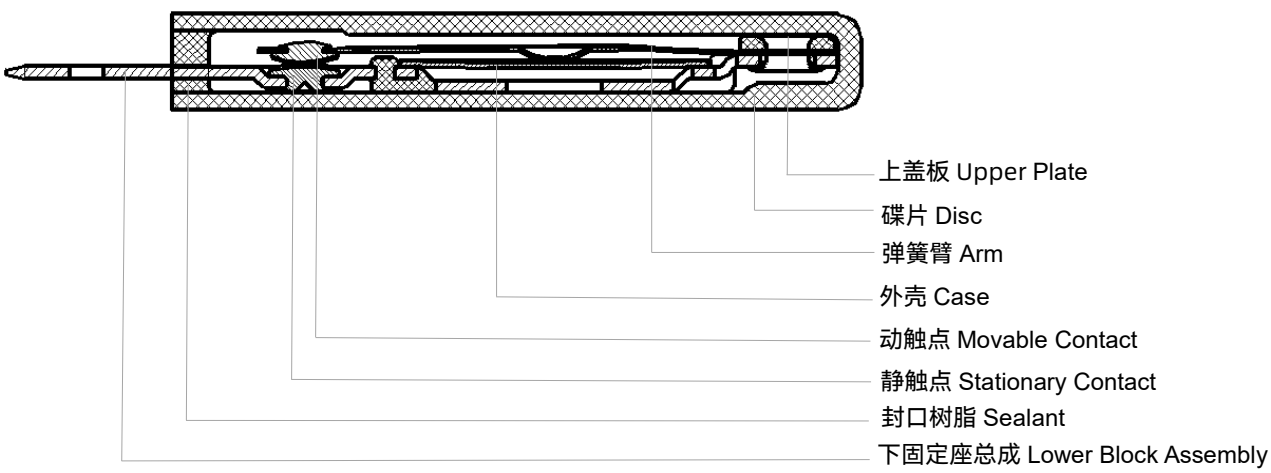

厦门赛尔特电子有限公司版权所有
All Rights Reserved by Xiamen SET Electronics Co., Ltd. 2021-2023 V5.0

安规认证 Agency Approvals

认证标志 Agency Mark	标准 Standards	认证号 File No.
CQC	GB/T14536.1-2008 GB/T14536.10-2008	On-going

技术参数 Specifications

	寿命 Cycle Life	电压 Rated Voltage (U_r)	电流 Rated Current (I_r)
触电容量 Contact Capacity	循环次数 Cycles	(V)	(A)
	≥ 10,000	AC 277	12
	≥ 10,000	AC 125	20
	≥ 100,000	DC 24	8
接触电阻 Contact Resistance	≤ 30 mΩ		
动作温度范围 Operating Temperature	30 ~ 155 ºC（每 5 ºC 一档）in increments of 5*K*		
长期工作温度 Long-term Service Temperature	-20 ~ 160 ºC		
电气强度 Electric Strength	1700 V.r.m.s. 60 Hz, 1 minute,（端子与外壳间）Terminal to Case		
引线规格 Lead Wire Type	UL3135 18 AWG 600 V,（其他规格可定制）other wire size is also available		

TMS

厦门赛尔特电子有限公司版权所有
All Rights Reserved by Xiamen SET Electronics Co., Ltd. 2021-2023 V5.0

产品型号 Part Number System

12TP - 125 - K - 9 C

端子类型 Terminal Type
见表-3 See Table-3
缺省 Default / A / B / C / D / E / F / G / H
缺省和A代指同一端子类型A Default and A are the same as terminal type A

材料类型 Material Type
见表-2 See Table-2
缺省 Default / 1 / 3 / 5 / 7 / 9
缺省和7代指同一材料类型A Default and 7 are the same as material type A

接触类型 Contact Status
缺省 Default: 常闭 Normal Close
K: 常开 Normal Open

温度代码 Temperature Code
见表-1 See Table-1

系列 Series
12TP

表-1温度代码 Table-1 Temperature Code

温度代码 Temperature Code	动作温度 Operating Temperature (°C)	复位温度 Recovery Temperature (°C)	温度代码 Temperature Code	动作温度 Operating Temperature (°C)	复位温度 Recovery Temperature (°C)
030	30	≥ 20	095	95	70
035	35	≥ 25	100	100	75
040	40	≥ 30	105	105	75
045	45	≥ 35	110	110	80
050	50	≥ 35	115	115	85
055	55	≥ 35	120	120	85
060	60	45	125	125	90
065	65	45	130	130	90
070	70	50	135	135	95
075	75	55	140	140	100
080	80	60	145	145	100
085	85	65	150	150	105
090	90	65	155	155	105

厦门赛尔特电子有限公司版权所有
All Rights Reserved by Xiamen SET Electronics Co., Ltd. 2021-2023 V5.0

表-2材料类型 Table-2 Material Type

代号 Code	五金件 Hardware	触点 Contact	铆钉压板 Slug
1	新日铁 Nippon Steel	银层 0.1 mm Silver Layer 0.1 mm	紫铜 Red Copper
3	黄铜 Brass	银层 0.1 mm Silver Layer 0.1 mm	紫铜 Red Copper
5	黄铜镀银 Brass Silver Plated	银层 0.1 mm Silver Layer 0.1 mm	紫铜 Red Copper
7	黄铜镀银 Brass Silver Plated	银层 0.1 mm Silver Layer 0.1 mm	紫铜镀银 Red Copper Silver Plated
9	黄铜镀银 Brass Silver Plated	银层 0.1 mm 镀金 Silver Layer 0.1 mm Gold Plated	紫铜镀银 Red Copper Silver Plated

表-3端子类型 Table-3 Terminal Type

代号 Code	图示及简述 Dimensions (mm)	代号 Code	图示与简述 Dimensions (mm)

A

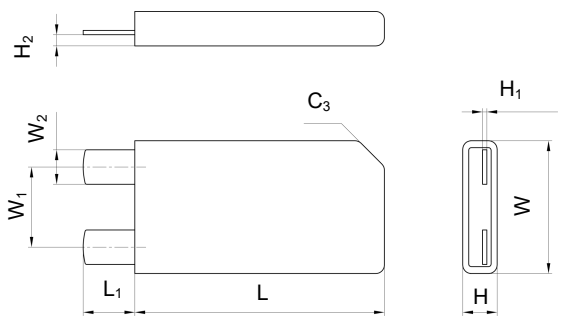

L (±0.5)	L_1 (±0.2)	H (±0.2)	H_1 (±0.1)
29.0	6.0	4.0	0.5
H_2 (±0.2)	W (±0.2)	W_1 (±0.2)	W_2 (±0.2)
1.3	15.4	9.3	4.0

B

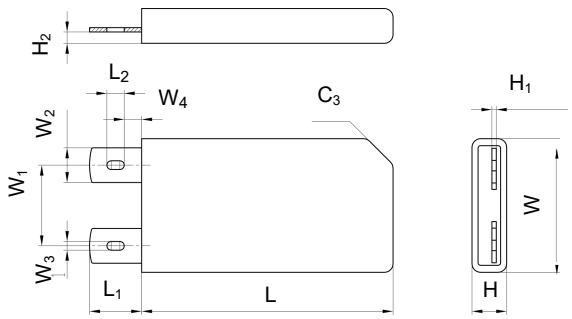

L (±0.5)	L_1 (±0.2)	H (±0.2)	H_1 (±0.1)	L_2 (±0.1)	H_2 (±0.2)
29.0	6.0	4.0	0.5	2.0	1.3
W (±0.2)	W_1 (±0.2)	W_2 (±0.2)	W_3 (±0.1)	W_4 (±0.1)	
15.4	9.3	4.0	1.0	2.0	

C

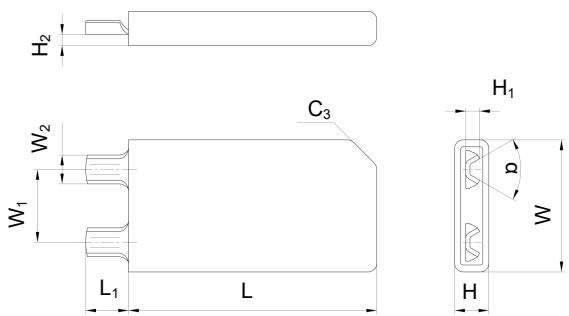

L (±0.5)	L_1 (±0.2)	H (±0.2)	H_1 (±0.1)	H_2 (±0.2)
29.0	5.0	4.0	1.6	1.3
W (±0.2)	W_1 (±0.2)	W_2 (±0.2)	α (±2°)	
15.4	8.5	3.4	60	

D

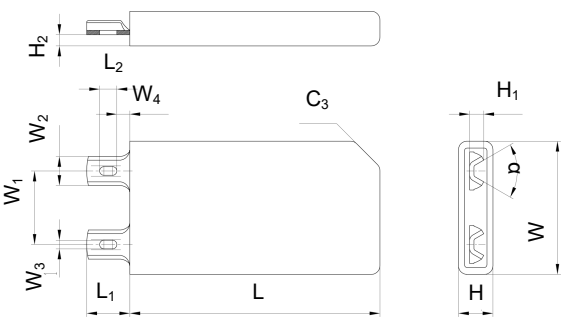

L (±0.5)	L_1 (±0.2)	L_2 (±0.1)	H (±0.2)	H_1 (±0.1)	H_2 (±0.2)
29.0	6.0	2.0	4.0	1.6	1.3
W (±0.2)	W_1 (±0.2)	W_2 (±0.2)	W_3 (±0.1)	W_4 (±0.1)	α (±2°)
15.4	8.5	3.4	1.0	1.5	60

厦门赛尔特电子有限公司版权所有
All Rights Reserved by Xiamen SET Electronics Co., Ltd. 2021-2023 V5.0

表-3端子类型 Table-3 Terminal Type

代号 Code	图示与简述 Dimensions (mm)	代号 Code	图示与简述 Dimensions (mm)

E

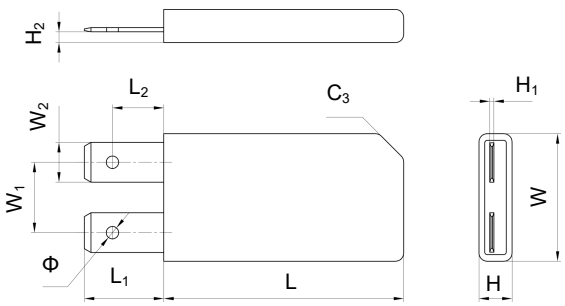

L (±0.5)	L_1 (±0.2)	L_2 (±0.1)	H (±0.2)	H_1 (±0.1)
29.0	9.6	6.2	4.0	0.5
H_2 (±0.2)	W (±0.2)	W_1 (±0.2)	W_2 (±0.2)	Φ (±0.2)
1.3	15.4	8.5	4.8	1.5

F

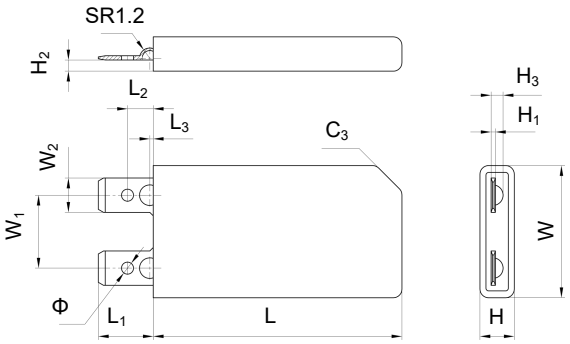

L (±0.5)	L_1 (±0.2)	L_2 (±0.1)	L_3 (±0.1)	H (±0.2)	H_1 (±0.1)
29.0	6.4	3.0	0.4	4.0	0.5
H_2 (±0.2)	H_3 (±0.2)	W (±0.2)	W_1 (±0.2)	W_2 (±0.2)	Φ (±0.2)
1.3	1.4	15.4	8.5	3.4	1.4

G

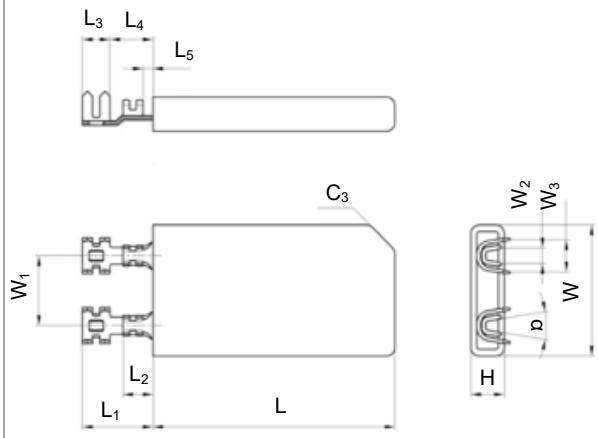

L (±0.5)	L_1 (±0.2)	L_2 (±0.1)	L_3 (±0.1)	L_4 (±0.1)	L_5 (±0.1)
29.0	8.45	3.6	3.3	5.15	1.2
H (±0.2)	W (±0.2)	W_1 (±0.2)	W_2 (±0.2)	W_3 (±0.2)	α (±1°)
4.0	15.4	8.2	1.85	3.8	18

H

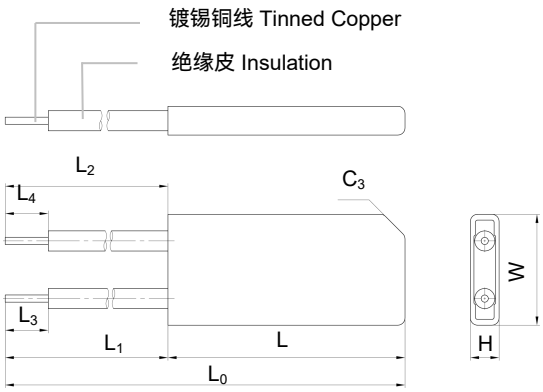

L (±0.5)	H (±0.2)	W (±0.2)	L_0, L_1, L_2, L_3, L_4 可定制 (can be customized)
33.0	4.0	15.4	

厦门赛尔特电子有限公司版权所有
All Rights Reserved by Xiamen SET Electronics Co., Ltd. 2021-2023 V5.0

包装信息 Packaging Information

散装（以表-3 C 型为例）
Bulk (Take Table-3 Type C terminal as an example)

项目 Item	PE袋 PE Bag	PE袋 PE Bag	纸箱 Carton
尺寸 Dimensions (mm)	150 × 85	220 × 190	370 × 315 × 195
数量 Quantity (PCS)	30	150	2400
备注：包装尺寸及数量仅供参考。 Remark: The dimensions and quantity of packaging is for reference only.			

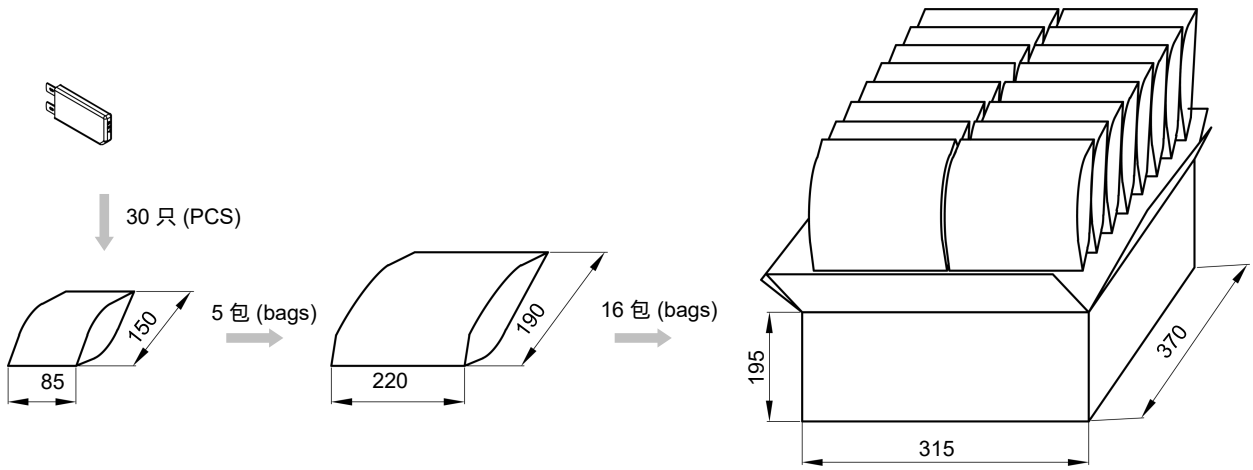

TMS

厦门赛尔特电子有限公司版权所有
All Rights Reserved by Xiamen SET Electronics Co., Ltd. 2021-2023 V5.0

热保护器
Thermal Protector (TMS)

产品描述 Description

赛尔特的 3CT 系列为自动复位、小型化的热保护器产品，主要用双金属片来感应电流、温度。当双金属片的温度达到预校准温度时，双金属片即快速跳脱，断开或接通电路。它的强健设计可以安装在浸漆电机的绕组上使用。另外其拥有热切断器和电机保护器的认证。

SETsafe | SETfuse 3CT is an auto resettable & miniature thermal protector. It mainly uses bimetal disc to sense current and temperature. When the temperature of the bimetal disc reaches the pre-calibration temperature, the bimetal disc will snap off quickly and connect or disconnect the circuit. It has robust performance to withstand varnish process and can be mounted on motor winding. Also, it has both thermal cut-off and thermal motor protector agency approval.

TMS

特性 Features

- 低接触电阻 Low Contact Resistance
- 对电流和温度敏感 Current and Temperature Sensitivity
- 灵活的设计和广泛的应用 Flexible Design and Wide Application
- 符合RoHS & REACH RoHS & REACH Compliance

应用领域 Applications

- 电池组 Battery Packs
- 电机 Motors
- 变压器 Transformers
- 加热器具 Heating Appliances
- 电动工具 Power Tools
- 螺线管 Solenoids

厦门赛尔特电子有限公司版权所有
All Rights Reserved by Xiamen SET Electronics Co., Ltd. 2021-2023 V5.0

结构图 Structure Diagrams

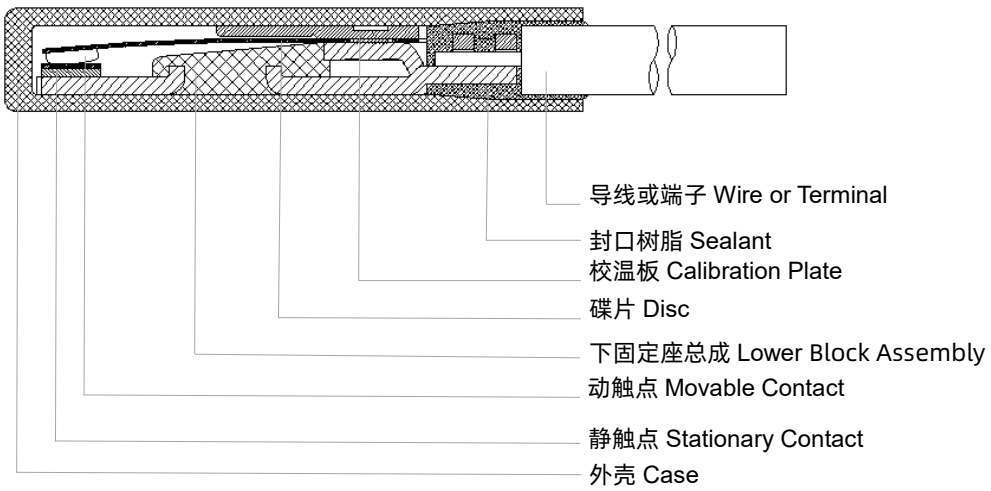

安规认证 Agency Approvals

认证标志 Agency	标准 Standards	认证号 File No.
	UL 60730-1 UL 60730-2-22	E516554
	UL 60730-1 UL 60730-2-9	E516553
	CSA E60730-1	E516554
	CSA E60730-1 CSA E60730-2-9	E516553
	EN 60730-1 EN 60730-2-22	R 50481203
	EN 60730-1 EN 60730-2-9	R 50480598
	GB/T14536.1-2008 GB/T14536.3-2008	CQC20002266233
	GB/T14536.1-2008 GB/T14536.10-2008	CQC20002266231

TMS

厦门赛尔特电子有限公司版权所有
All Rights Reserved by Xiamen SET Electronics Co., Ltd. 2021-2023 V5.0

技术参数 Specifications

	寿命	电压	电流
触点容量 Contact Capacity	循环次数 Cycles	(V)	(A)
	≥ 10,000	AC 277	3
	≥ 10,000	AC 125	5
	≥ 10,000	DC 24	5
	≥ 10,000	DC 12	8
接触电阻 Contact Resistance	≤ 30 mΩ		
动作温度范围 Operating Temperature	30 ~ 155 ºC（每 5 ºC 一档）in increments of 5*K*		
长期工作温度 Long-term Service Temperature	-20 ~ 160 ºC		
电气强度 Electric Strength	1700 V.r.m.s. 60 Hz, 1 minute,（端子与外壳间）Terminal to Case		
引线规格	UL3266 22 AWG 300 V,（其他规格可定制）other wire size is also available		

TMS

产品型号 Part Number System

3CT - 125 - B K

接触类型 Contact Status
缺省 Default: 常闭 Normal Close
K: 常开 Normal Open

端子类型 Terminal Type
见表-2 See Table-2
缺省 Default / A / B / C / D / E / F / G
缺省和A代指同一端子类型A (Default has the same terminal type as A)

温度代码 Temperature Code
见表-1 See Table-1

系列 Series
3CT

厦门赛尔特电子有限公司版权所有
All Rights Reserved by Xiamen SET Electronics Co., Ltd. 2021-2023 V5.0

表-1温度代码 Table-1 Temperature Code

温度代码 Temperature Code	动作温度 Operating Temperature	复位温度 Recovery Temperature
	±5 (°C)	±15 (°C)
030	30	≥ 20
035	35	≥ 25
040	40	≥ 30
045	45	≥ 35
050	50	≥ 35
055	55	≥ 35
060	60	45
065	65	45
070	70	50
075	75	50
080	80	55
085	85	60
090	90	60

温度代码 Temperature Code	动作温度 Operating Temperature	复位温度 Recovery Temperature
	±5 (°C)	±15 (°C)
095	95	65
100	100	70
105	105	70
110	110	75
115	115	75
120	120	80
125	125	85
130	130	90
135	135	90
140	140	95
145	145	100
150	150	100
155	155	105

TMS

厦门赛尔特电子有限公司版权所有
All Rights Reserved by Xiamen SET Electronics Co., Ltd. 2021-2023 V5.0

表-2端子类型 Table-2 Terminal Type

类型 Type	尺寸 Dimensions (mm)	类型 Type	尺寸 Dimensions (mm)
A	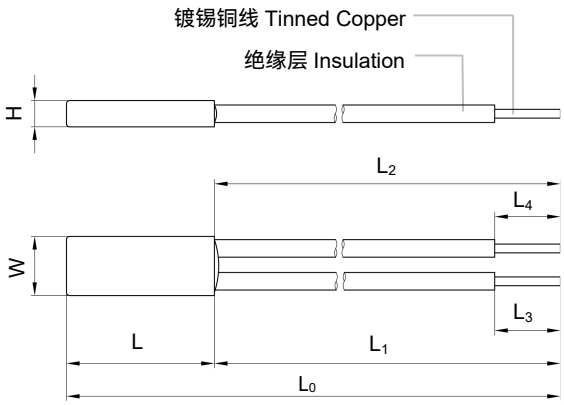	B	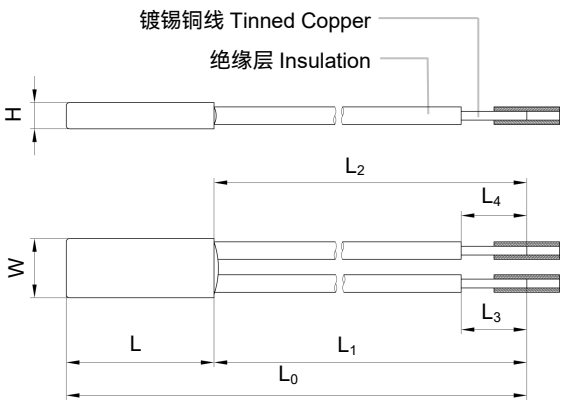
C	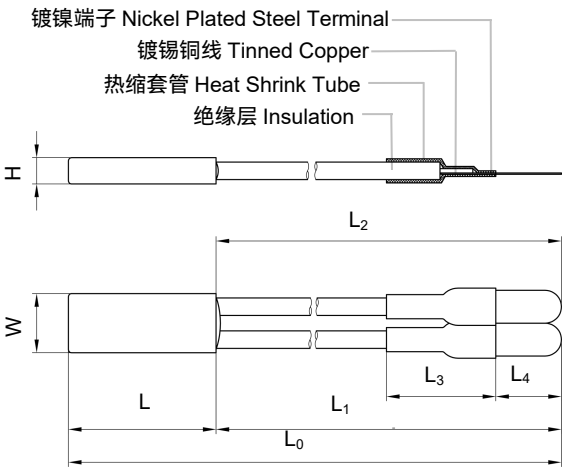	D	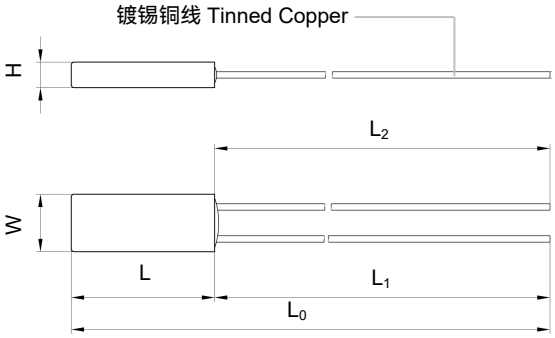

L (±0.5)	H (±0.2)	W (±0.2)	L_0, L_1, L_2, L_3, L_4 可定制 (can be customized)
13.5	2.4	5.4	

L (±0.5)	H (±0.2)	W (±0.2)	L_0, L_1, L_2, L_3, L_4 可定制 (can be customized)
13.5	2.4	5.4	

L (±0.5)	H (±0.2)	W (±0.2)	L_0, L_1, L_2, L_3, L_4 可定制 (can be customized)
13.5	2.4	5.4	

L (±0.5)	H (±0.2)	W (±0.2)	L_0, L_1, L_2 可定制 (can be customized)
13.5	2.4	5.4	

TMS

厦门赛尔特电子有限公司版权所有
All Rights Reserved by Xiamen SET Electronics Co., Ltd. 2021-2023 V5.0

表-2端子类型 Table-2 Terminal Type

类型 Type	尺寸 Dimensions (mm)	类型 Type	尺寸 Dimensions (mm)
E	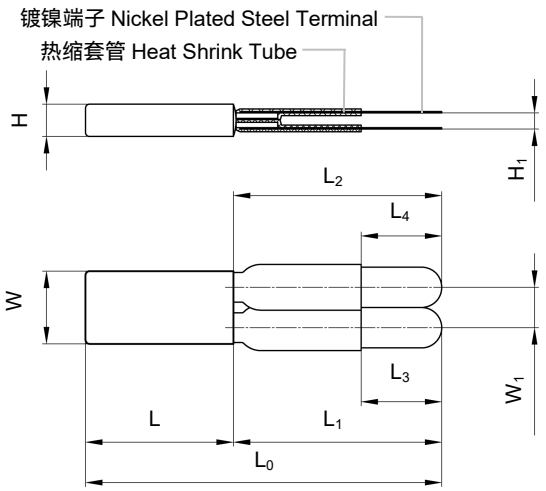	F	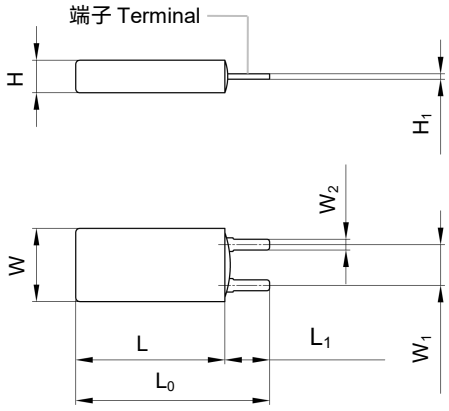
G	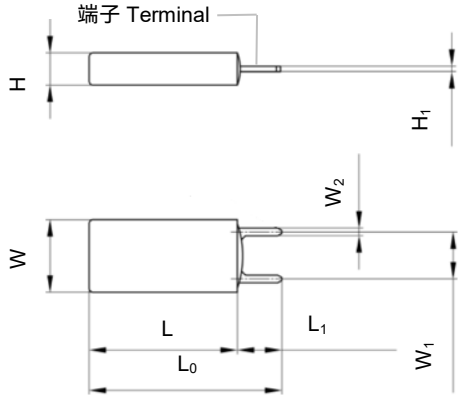		

L (±0.5)	H (±0.2)	W (±0.2)	W_1 (±0.1)	H_1 (±0.2)	L_0, L_1, L_2, L_3, L_4 可定制 (can be customized)
11.0	2.4	5.4	3.0	1.2	

L (±0.5)	L_0 (±0.3)	L_1 (±0.3)	H (±0.2)
11.0	14.5	3.5	2.4
H_1 (±0.1)	W (±0.2)	W_1 (±0.2)	W_2 (±0.1)
0.4	5.4	3.0	0.8

L (±0.5)	L_0 (±0.3)	L_1 (±0.3)	H (±0.2)
11.0	14.5	3.5	2.4
H_1 (±0.1)	W (±0.2)	W_1 (±0.1)	W_2 (±0.1)
0.4	5.4	3.5	0.6

TMS

厦门赛尔特电子有限公司版权所有
All Rights Reserved by Xiamen SET Electronics Co., Ltd. 2021-2023 V5.0

包装信息 Packaging Information

散装（以 3CT 表-2 A 型，$L_1 = L_2 = 70$ mm 为例）
Bulk (Take 3CT Table-2 Type A, $L_1 = L_2 = 70$ mm as an example)

项目 Item	PE袋 PE Bag	PE 袋 PE Bag	纸箱 Carton
尺寸 Dimensions (mm)	150 × 85	220 × 190	370 × 315 × 195
数量 Quantity (PCS)	100	500	8000
备注：包装尺寸及数量仅供参考。 Remark: The dimensions and quantity of packaging is for reference only.			

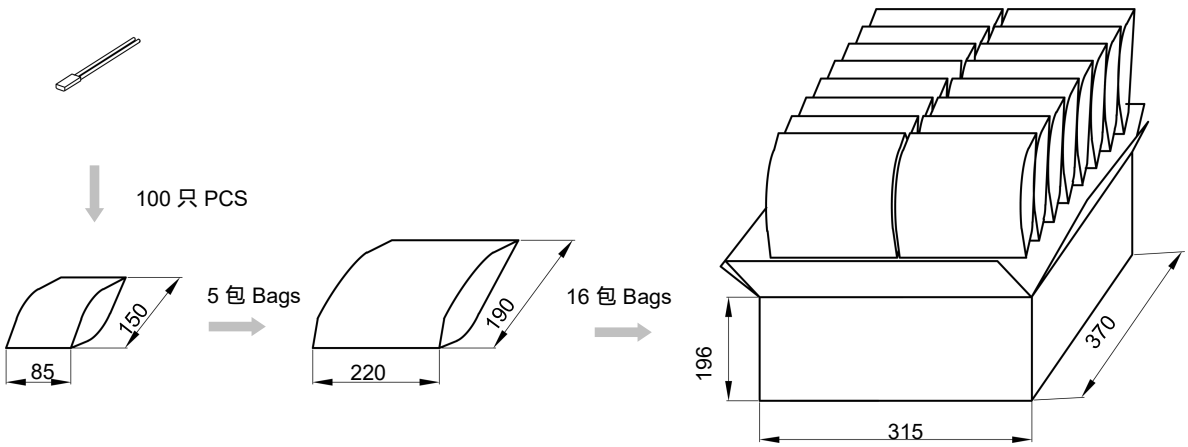

TMS

厦门赛尔特电子有限公司版权所有
All Rights Reserved by Xiamen SET Electronics Co., Ltd. 2021-2023 V5.0