电涌保护器 SPD
Surge Protective Device

过电压 Overvoltage

电力是人类现代生产、生活中必不可少的一部分，但电力设施会受到来自内部和外部过电压的威胁，主要有以下几个方面：
雷电：雷击瞬间会产生很大的能量和高达数百千安的浪涌电流，并且瞬态过电压（LEMP:雷电磁脉冲）会沿电力线路入侵，造成电力设施和用电设备损坏。
操作过电压：大型感性（容型）设备（如电源模块）的操作会产生瞬时的过电压。
暂时过电压：主要是持续时间较长（秒级）的工频暂时过电压（不对称接地故障等）和谐振过电压。
Electricity is an essential part of modern human production and life. But power facilities are threatened by internal and external overvoltages. Power system overvoltage mainly includes:
Transient overvoltage of atmospheric origin: Lightning strikes instantly generate high energy, generating surge currents up to hundreds of kA, and lightning wave can invade along power lines, causing damage to power facilities and electrical equipment.
Transient overvoltage due to switching: Switching operations of a power utility may cause overvoltage.
Temporary overvoltage: A long duration (second level) temporary overvoltage (asymmetric ground fault) or harmonious overvoltage.

雷电造成的电涌电压

雷电电磁脉冲（LEMP）会危及电气和电子系统，因此应采取LEMP防护措施(SPM)以避免建筑物内电气和电子系统的失效。而雷电磁脉冲产生的浪涌可由直击雷、临近雷击或远处雷击引起。根据相关研究资料表明，一定范围内的雷击都有可能在线缆上产生危险过电压，危害与之相连的设备。
Electrical and electronic system are subject to damage from a lighting electromagnetic impulse (LEMP). Therefore SPM need to be provided avoid failure of internal system. LEMP may caused by direct, near and far lightning strikes. According to the relevant research, lightning strikes within a certain distance may cause dangerous overvoltage on the cable, endangering the equipment connected to it.

雷电的危害 Damage due to lighting

雷电可能产生三种基本的损害类型：
—D1：接触电压和跨步电压使人和动物收到伤害；
—D2：包括有火花的雷电流效应引起的物理损害（火灾、爆炸、机械损坏、化学品泄漏等）；
—D3：LEMP导致内部系统失效。
The lighting can cause three basic type of damage:
—D1: injury to living beings by electric shock
—D2: physical damage (fire, explosion, mechanical destruction, chemical release) due to lighting current effects, including sparking
—D3: failure of internal systems due to LEMP

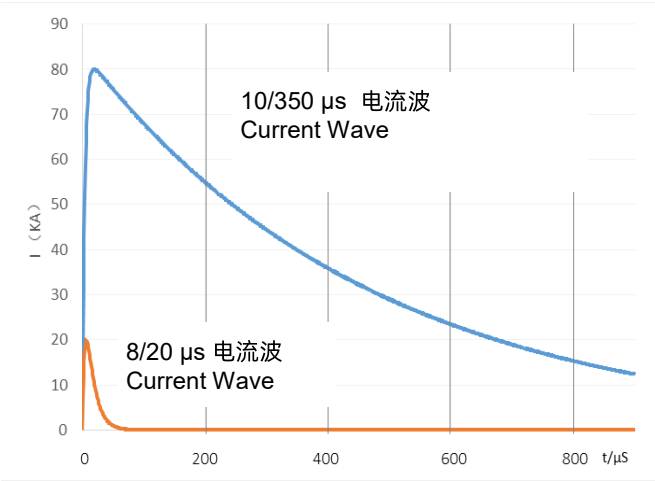

标准雷电测试波形 Standard lightning test wave

厦门赛尔特电子有限公司版权所有
All Rights Reserved by Xiamen SET Electronics Co., Ltd. 2021-2023 V3.0

电涌保护器 SPD
Surge Protective Device

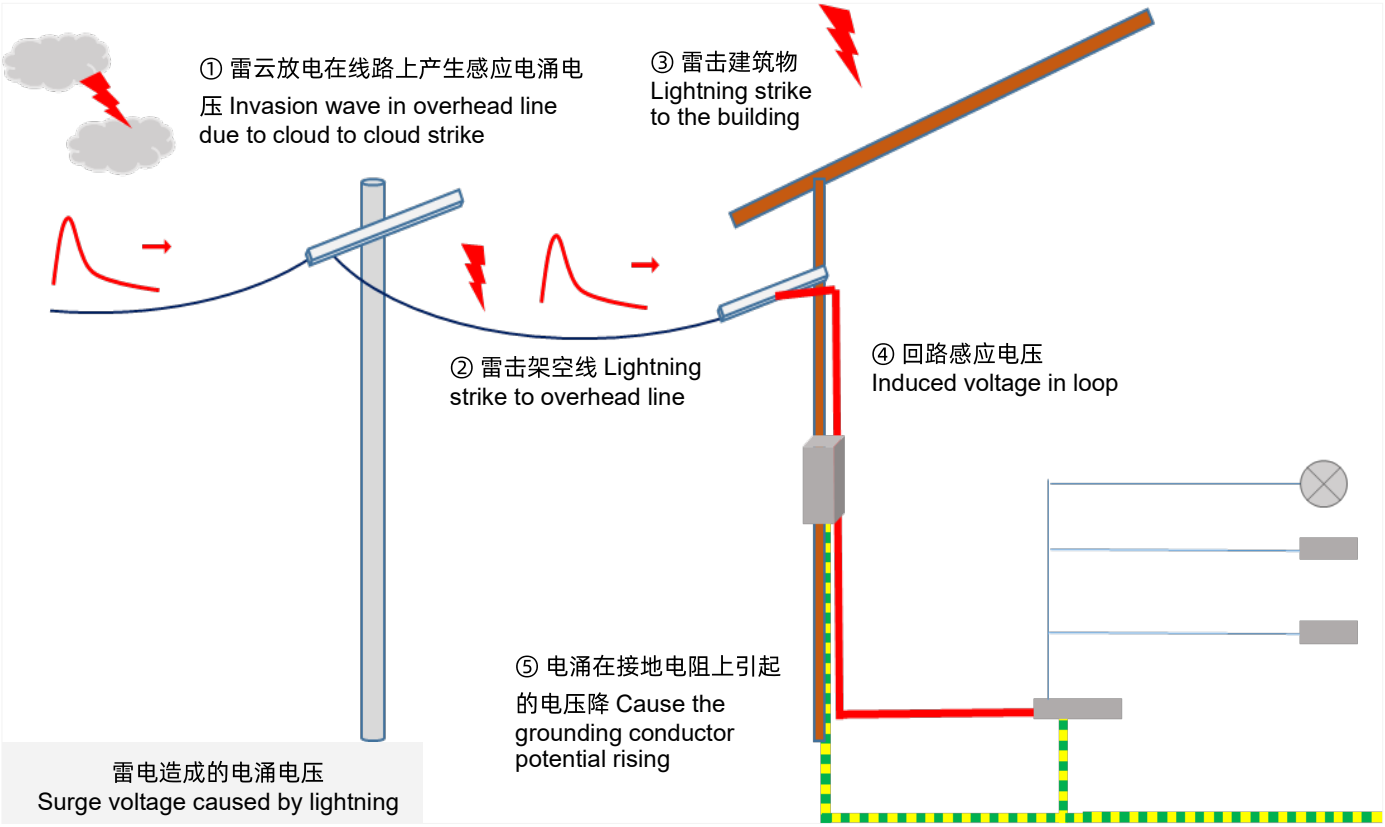

设备耐冲击电压和电涌保护 Impulse withstand voltage and surge protection

SPD作为内部防雷电磁脉冲的主要设备，需要能够承受浪涌冲击电流和提供设备所需的电压保护水平。这涉及到不同位置SPD间的选型和保护配合,从而形成完整的防护措施系统。

As the primary equipment of internal lightning-proof, SPD needs to be able to withstand surge stress and provides the level of voltage protection required for the equipment. This involves the selection and coordination of SPD in different locations to form a complete protection system.

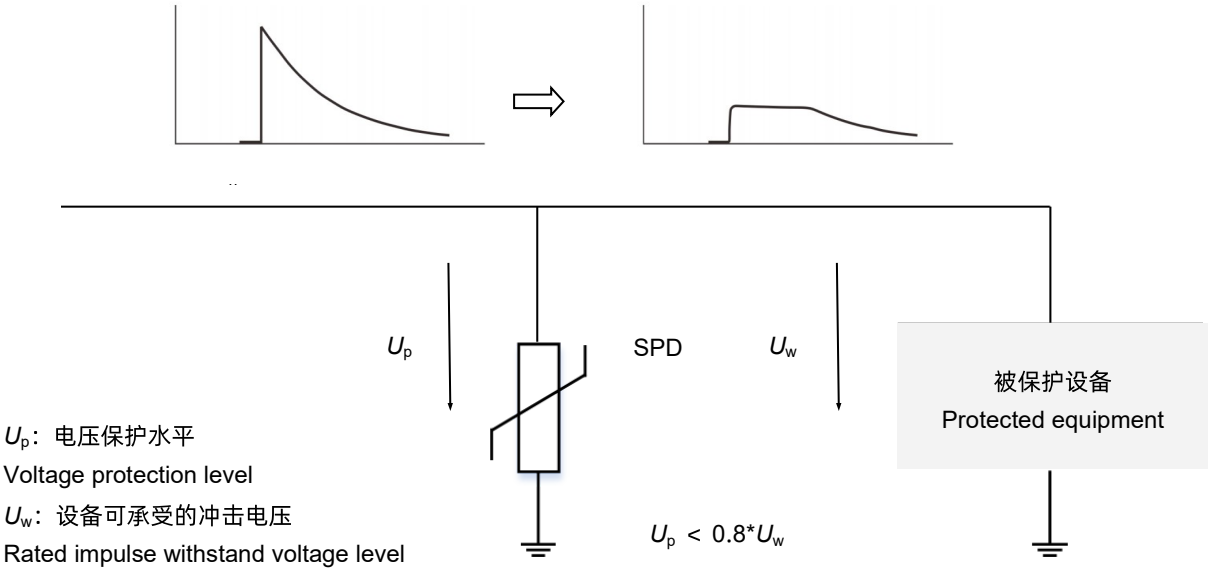

厦门赛尔特电子有限公司版权所有
All Rights Reserved by Xiamen SET Electronics Co., Ltd. 2021-2023 V3.0

电涌保护器 SPD
Surge Protective Device

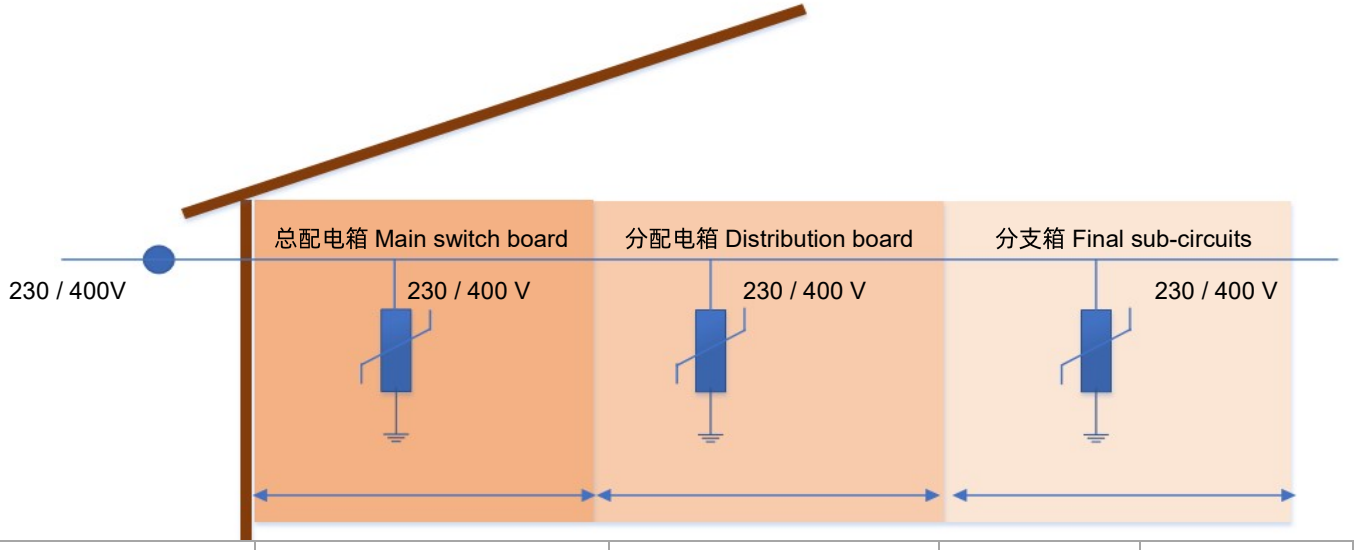

耐冲击电压类别 Overvoltage Category	IV	III	II	I
耐冲击电压U_w（kV） Impulse Withstand	6	4	2.5	1.5
防雷保护区 Lightning Protection Zone LPZ	LPZ1	LPZ2	LPZn	
SPD类型 Type	Class I or Class II	Class II	Class II or Class III	

SPD

厦门赛尔特电子有限公司版权所有
All Rights Reserved by Xiamen SET Electronics Co., Ltd. 2021-2023 V3.0

导轨安装电涌保护器 Din-rail Surge Protective Device

电涌保护器根据UL 1449 和 IEC/EN 61643-11的相关要求进行设计，是导轨安装的SPD，具有安全失效保护，失效指示和遥信触点等功能。电涌保护器具有良好的环境适应性，满足重要场所下的高可靠性要求。

Surge protective devices (SPDs) are designed to meet requirements for UL 1449 and IEC/EN 61643-11. They are DIN-rail mountable featuring a fail-safe protection, visual indicator and remote signal contact. It has a good environmental

特性 Features

- 适用于TN和TT供电系统
  Suitable for TN and TT Systems
- 具有遥信触点和失效指示功能
  With Remote Signal Contact and Fault Indication
- 可插拔模块方便更换
  Pluggable Module for Easy Replacement
- 内置过温保护，更安全的失效保护
  Internal Thermal Protection, Fail-safe

应用 Applications

- 交直流系统 AC / DC Power System
- 新能源 New Energy
- 民用建筑 Residential Building
- 通信 Telecommunications
- 数据中心 Internet Data Center (IDC)
- 配电系统 Distribution System

+86-592-571-5838 www.SETfuse.com www.SETsafe.com E-mail : sales@SETfuse.com

厦门赛尔特电子有限公司版权所有
All Rights Reserved by Xiamen SET Electronics Co., Ltd. 2021-2023 V3.0

术语 Glossary

项目 Item	定义 Description
U_p	**电压保护水平 Voltage Protection Level** 由于施加规定陡度的冲击电压和规定幅值及波形的冲击电流而在SPD两端之间预期出现的最大电压。 Maximum voltage to be expected at the SPD terminals due to an impulse stress with defined voltage steepness and an impulse stress with a discharge current with given amplitude and wave shape. — (IEC 61643-11)
8/20 μs	**8/20 冲击电流 Current Impulse** 视在波前时间为8μs，半峰值时间为20μs的冲击电流。 Current impulse with a nominal virtual front time of 8 μs and a nominal time to half-value of 20 μs. — (IEC 61643-11)
1.2/50 μs	**1.2/50 冲击电压 Voltage Impulse** 视在波前时间为1.2μs，半峰值时间为50μs 的冲击电压。 Voltage impulse with a nominal virtual front time of 1.2 μs and a nominal time to half-value of 50 μs. — (IEC 61643-11)
U_c	**最大持续工作电压 Maximum Continuous Operating Voltage** 可连续地施加在SPD上的最大交流电压有效值。 Maximum r.m.s. voltage, which may be continuously applied to the SPD's mode of protection. — (IEC 61643-11)
I_n	**标称放电电流 Nominal Discharge Current** 流过SPD具有8/20波形电流的峰值。 Crest value of the current through the SPD having a current waveshape of 8/20. — (IEC 61643-11)
I_{imp}	**I 类试验的冲击电流 Impulse Discharge Current for Class I Test** I_{imp}由三个参数来定义：电流峰值 I_{peak} 、电荷量 Q 和比能量 W/R。 Crest value of a discharge current through the SPD with specified charge transfer Q and specified energy W/R in the specified time. — (IEC 61643-11)
I_{max}	**最大放电电流 Max. Discharge Current** 具有 8/20 μs 波形和制造厂声称幅值的流过SPD电流的峰值。I_{max} 等于或大于 I_n。 Crest value of a current through the SPD having an 8/20 waveshape and magnitude according to the manufacturers specification. I_{max} is equal to or greater than I_n. — (IEC 61643-11)
Modes of protection	**保护模式 Modes of protection** 在端子间包含保护元器件的电流路径，例如相对相、相对地、相对中线、中线对地。 An intended current path, between terminals that contains protective components, e.g. line-to-line, line-to-earth, line-to-neutral, neutral-to-earth. — (IEC 61643-11)
IP	**外壳防护等级 Degrees of Protection of enclosure** 外壳提供的防止触及危险的部件、防止外界的固体异物进入和/或防止水的进入壳内的防护程度。 Classification preceded by the symbol IP indicating the extent of protection provided by an enclosure against access to hazardous parts, against ingress of solid foreign objects and possibly harmful ingress of water. — (IEC 61643-11)

SPD

厦门赛尔特电子有限公司版权所有
All Rights Reserved by Xiamen SET Electronics Co., Ltd. 2021-2023 V3.0

工作原理 Operation Principle

当电流无浪涌时，SPD等效于开路（阻抗 > 100 MΩ）。

SPD is equivalent to open circuit when the circuit without surge (Impedance > 100 MΩ).

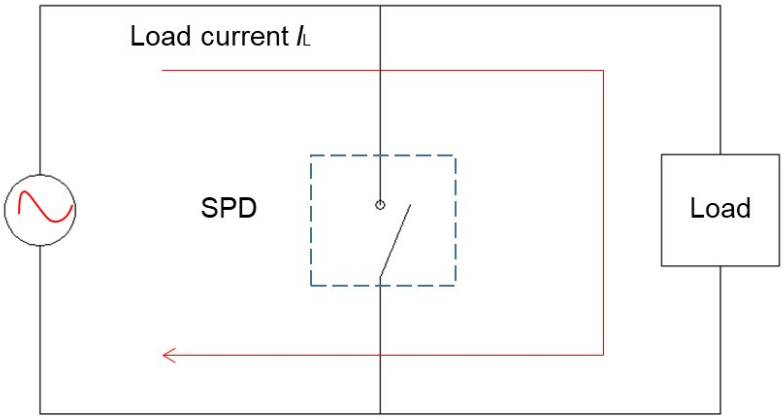

当电路有浪涌入侵时，SPD回路突变为低阻抗，将浪涌泄放到大地中。

When a surge invades the circuit, the SPD circuit mutates to a low impedance, releasing the surge current into the ground.

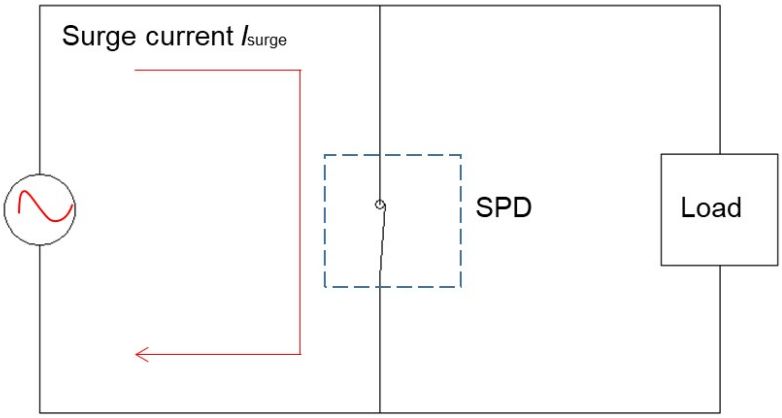

厦门赛尔特电子有限公司版权所有
All Rights Reserved by Xiamen SET Electronics Co., Ltd. 2021-2023 V3.0

型号说明 Part Numbering System

SD 25 T 100 L 2 11 PV -xxx

其他选项 Other Options

特殊功能代码 Modes of Protection
默认：用于交流系统 For AC systems
PV：用于光伏直流系统 For PV/DC systems

接线形式 Wire Connection
00：单一保护，相线使用 One protection mode, for L-line
01：分相系统，2W+G Split-phase system, 2W+G
02：分相系统，3W+G Split-phase system, 3W+G
03：单相系统或直流系统，2W+G One-phase or DC system, 2W+G
04：三相系统 TT/TN（3+1）Three-phase system TT/TN (3+1)
05：三相系统（4+0）或单相系统（2+0） Three-phase system (4+0) or Single-phase system（2+0）
06：三相系统 IT（3+0） Three-phase system IT (3+0)
11: 光伏系统U型接线 U shape construction for PV/DC system
12: 光伏系统Y型接线 Y shape construction for PV/DC system
16：三相系统，TT/TN（3+1），N-PE为无脱扣放电管模式 Three-phase system TT/TN (3+1), N-PE has GDT without trip

特性参数代码 Characteristic code
1：1个模块 One pole
2：2个模块 Two poles
3：3个模块 Three poles
4：4个模块 Four poles

电路特征 Circuit Characteristic
A：带GDT With GDT
L：通常为2+0和3+0、4+0保护模式,不带GDT 2+0,3+0,4+0 without GDT
F：保护模式3+1，N-PE为无脱扣放电管模式 3+1, N-PE has GDT without trip

标称系统电压 Nominal System Voltage
150 V, 230 V, 270 V, 320 V

设计系列 Design Sequence
T R H S C

标称放电电流 Nominal Discharge Current
20：20 kA
25：25 kA
30：30 kA

产品类别 Product Category

认证信息 Agency Information

认证信息 Agency Information		标准 Standards	档案号 NO.	类别 Category
	UL	UL 1449	E322662	VZCA2
	CUL	CSA C22.2 NO.269, CSA ECN 516	E322662	VZCA8
	TUV	IEC/EN 61643-11, IEC/EN 61643-31	详见具体型号 See the different models for details	
	CE	IEC/EN 61643-11, IEC/EN 61643-31	详见具体型号 See the different models for details	
	CB	IEC/EN 61643-11	详见具体型号 See the different models for details	
	CQC	GB/T 18802.1-2011	详见具体型号 See the different models for details	

厦门赛尔特电子有限公司版权所有
All Rights Reserved by Xiamen SET Electronics Co., Ltd. 2021-2023 V3.0

注意

ATTENTION

使用方法 Usage

1. 持续施加在SPD上的电压不应超过其最大连续工作电压U_c。
   The voltage applied continuously to the SPD can not exceed its maximum continuous operating voltage U_c.
2. 气压在 45 kPa 到106 kPa，对应海拔为+5000 m至- 500 m。
   When atmosphere press is from 80 kPa to 106 kPa, the related altitude shall be from +2000 m to -500 m.
3. 通电情况下请勿直接触碰本体或引脚，防止触电。
   Do not touch the product body or pins directly when power is on, to avoid electric shock.

更换 Replacement

基于安全原因，SPD是不可修复的产品，替换时应使用同类别同型号的产品。
SPD is a non-repairable product. For safety sake, please use equivalent SPD for replacement.

存贮 Storage

SPD的贮存应避免高温、高湿、日光直射和腐蚀性气体的场合，避免引线氧化。产品购入后请于2年内使用完。
Please store the SPD without high temperature, high humidity or corrosive gas. To avoid oxidation of the lead wires, please use them up within 2 years after receiving the goods.

厦门赛尔特电子有限公司版权所有
All Rights Reserved by Xiamen SET Electronics Co., Ltd. 2021-2023 V3.0

安装 Installation

1. 仅专业电气人员可进行相关安装和调试。必须遵守相关国家的法规。
   Installation and startup may only be carried out by qualified personnel. The relevant country-specific regulations must be observed.
2. 安装前请务必检查设备是否有外部破损。如设备有缺陷，则不得使用。
   Check the device for external damage before installation. If the device is defective, it must not be used.
3. 注意触电危险。请在安装使用前断开电源。
   Pay attention to risk of electric shock. Please cut off all electrical power before installation or service.
4. 连接至电涌保护装置 （SPD）的输出电缆应尽可能短，避免形成回路。
   Lay the output cables to the surge protective devices (SPDs) as short as possible, without loops.
5. 请在电涌保护器前端安装合适的后备保护装置。
   Please install proper backup protection devices in front of SPD.
6. 安装过程和安装后不宜对电涌保护器本体施加机械应力。
   Do not apply mechanical stress to the SPD body during or after the installation.

维护 Maintenance

1. 每年在雷雨季节的前后根据说明检查SPD的状态 。
   Check SPD status according to instructions before and after the thunderstorm season each year.
2. 如果出现”故障状态”的指示，则表示SPD损坏。 请用相同型号的SPD替换。
   If the indicator of "failure state" appears, the SPD is damaged. Replace the SPD with same type.
3. 电路通电前确保电气连接和安装正确。
   Ensure electrical connections and mountings are correct before energizing the circuit.
4. 产品在出厂前均经过严格的检验和质量控制，如发现工作异常，请及时与本公司联系
   SPD`s quality is well controlled and strictly inspected before delivery. If non-functional ones are found during operation, please contact us early enough.

SPD

厦门赛尔特电子有限公司版权所有
All Rights Reserved by Xiamen SET Electronics Co., Ltd. 2021-2023 V3.0

连接于低压配电系统的电涌保护器

SPD Connected to LV Power Supply System

- 交直流系统 AC / DC Power System
- 新能源 New Energy
- 民用建筑 Residential Building
- 通信 Telecommunications
- 配电系统 Distribution System

厦门赛尔特电子有限公司版权所有
All Rights Reserved by Xiamen SET Electronics Co., Ltd. 2021-2023 V3.0

接线示意图 Wiring Diagram

单相系统 Single phase system

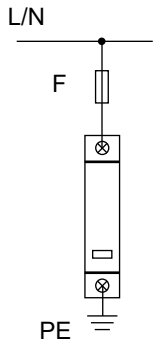

“1+0” 接线
Connection

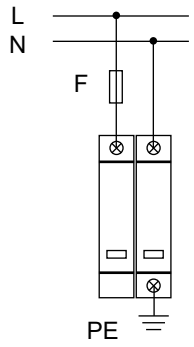

“2+0” 接线
Connection

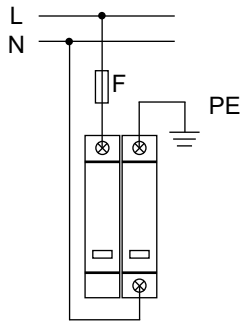

“1+1” 接线
Connection

三相系统 Three phase system

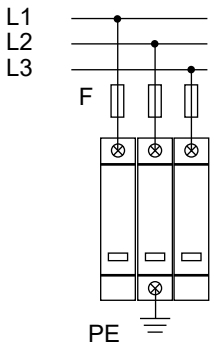

“3+0” 接线
Connection

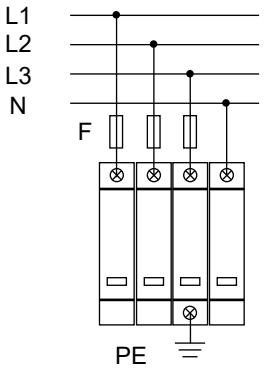

“4+0” 接线
Connection

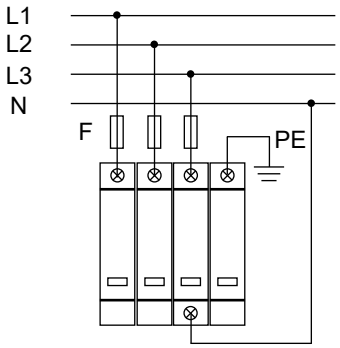

“3+1” 接线
Connection

电涌保护器在电路中的连接 Connection of SPD in networks

TN-S

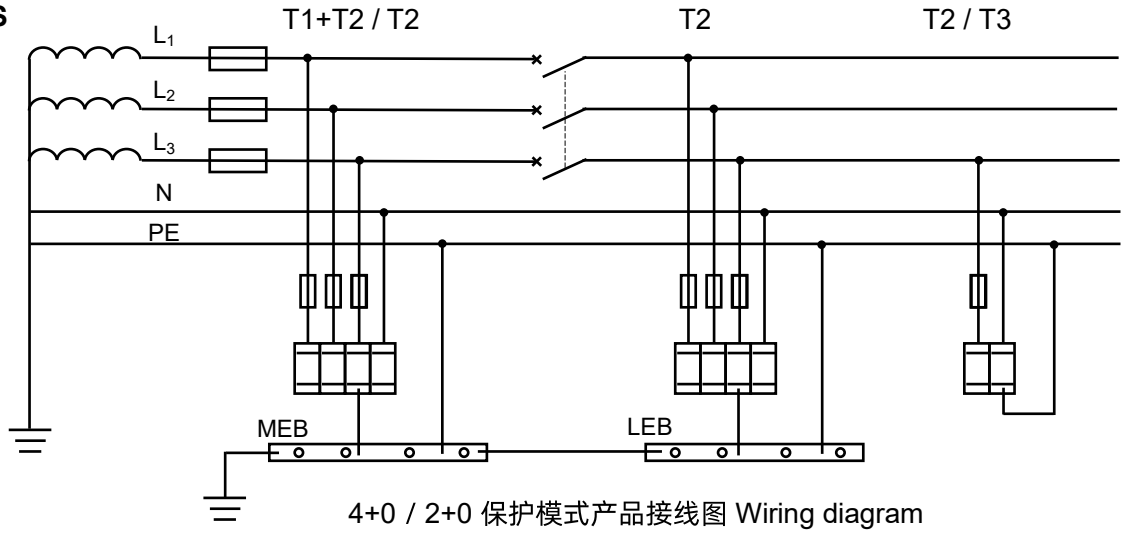

4+0 / 2+0 保护模式产品接线图 Wiring diagram

厦门赛尔特电子有限公司版权所有
All Rights Reserved by Xiamen SET Electronics Co., Ltd. 2021-2023 V3.0

TN-S

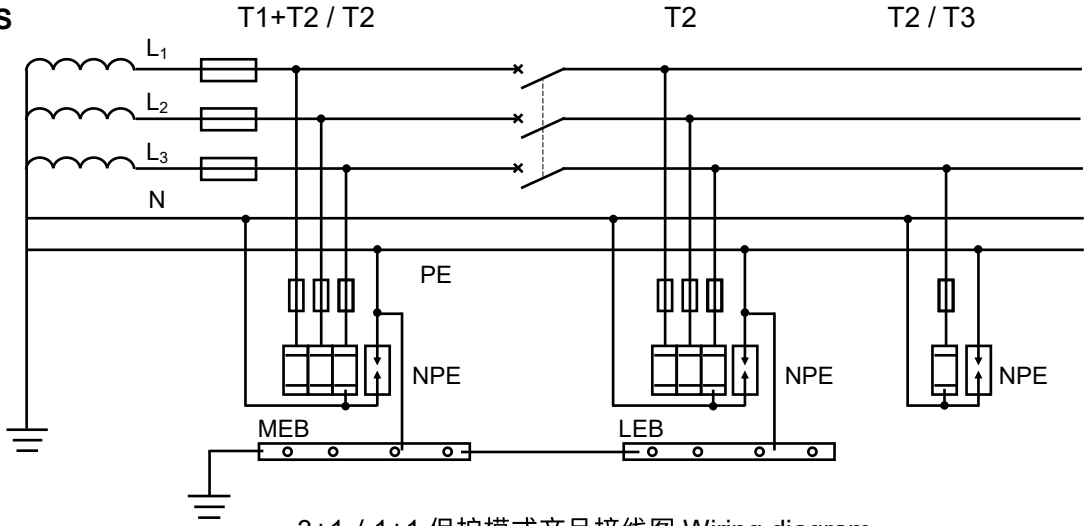

3+1 / 1+1 保护模式产品接线图 Wiring diagram

TT

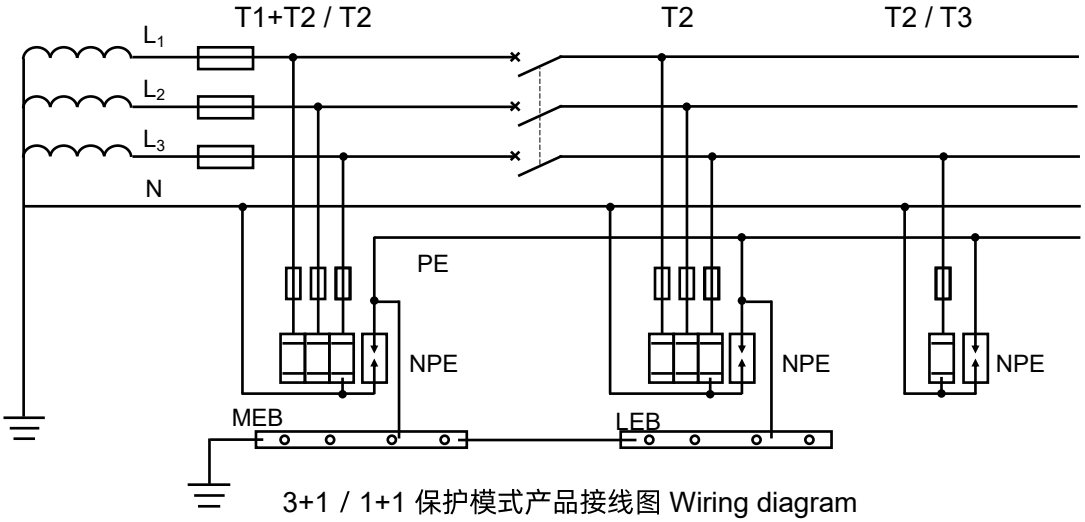

3+1 / 1+1 保护模式产品接线图 Wiring diagram

IT

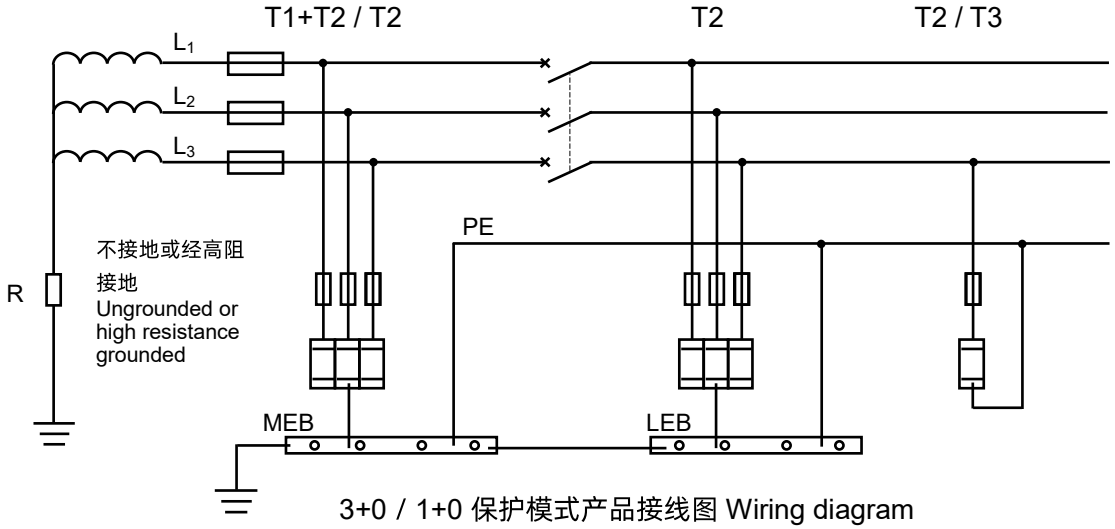

3+0 / 1+0 保护模式产品接线图 Wiring diagram

厦门赛尔特电子有限公司版权所有
All Rights Reserved by Xiamen SET Electronics Co., Ltd. 2021-2023 V3.0

电涌保护器 SPD
Surge Protective Device

SD20S 系列 Series

- MOV模块脱扣能力
  MOV Module Tripping Ability: 800 V, 100 A
- 良好的耐候性 High Environmental Adaptability
- 结构紧凑，高度仅49 mm Compact Structure with Height Only 49 mm
- 带遥信和失效指示 With Remote Signaling and Failure Indicator

尺寸 Dimensions (mm)

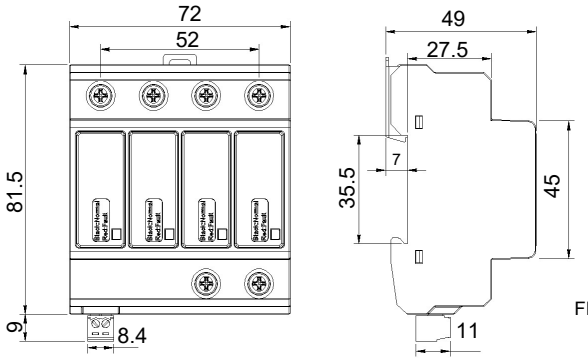

电路原理图 Schematics

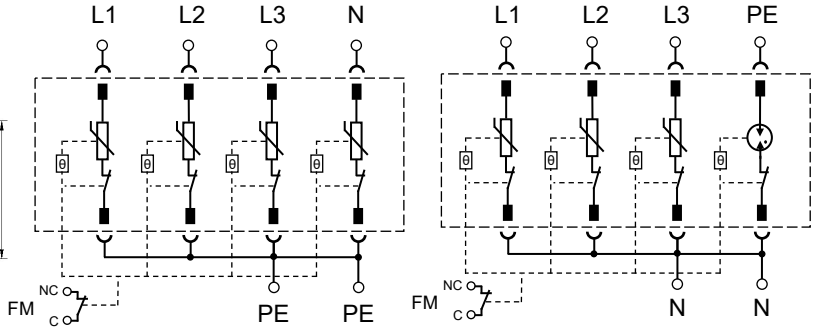

SD20S230L405 SD20S230A404

技术特性 Features	技术参数 Specifications	
型号 Model	SD20S230L405	SD20S230A404
标称系统电压 Nominal System Voltage (U_n)	230 VAC	230 VAC
最大连续工作电压 Maximum Continuous Operating Voltage (U_c)	L / N - PE: 385 VAC	L - N: 385 VAC; N - PE: 255 VAC
标称放电电流 Nominal Discharge Current (8/20 μs) (I_n)	20 kA	20 kA
最大放电电流 Maximum Discharge Current (8/20 μs) (I_{max})	40 kA	40 kA
电压保护水平 Voltage Protection Rating (U_p)	L / N - PE: 1.8 kV	L - N: 1.8 kV; N - PE: 1.0 kV
保护模式 Modes of protection	4+0 (L / N - PE)	3+1 (L - N, N - PE)
电源侧最大过电流保护 Max. Main-side Overcurrent Protection	125 A gL/gG	
额定短路电流 Short Current Rating I_{SCCR}	25 kA	
依据标准 According to Standard	GB/T 18802.11	
外壳防护等级 Degrees of Protection of enclosure	IP20	
接线能力 Wiring Ability	(3 to 8) mm^2	
安装方式 Installation	35 mm 导轨 DIN rail 35 mm	
告警方式 Alarm	遥信+指示窗 Remote + Indicator	
状态指示 Operating State / Fault Indication	黑色 / 红色 Black / Red	
遥信触点 Remote Indication Contacts	AC: 250 V / 0.5 A, DC: 250 V / 0.1 A	
海拔 Altitude	0 ~ 4000 m	
工作温度 Operational Temperature Range	(-40 to 85) °C	

厦门赛尔特电子有限公司版权所有
All Rights Reserved by Xiamen SET Electronics Co., Ltd. 2021-2023 V3.0